Romotop® SOLID FN

KERAMIKA
KERAMIK
CERAMIC

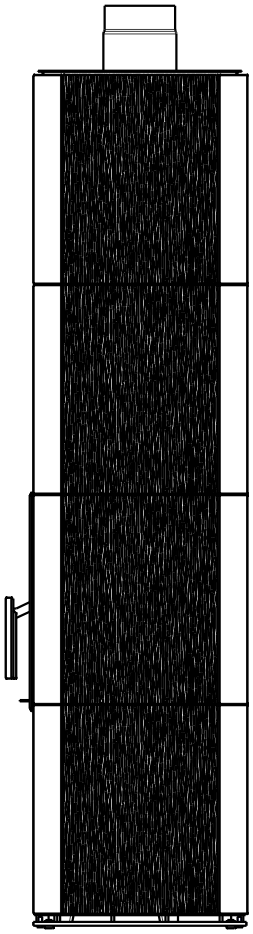

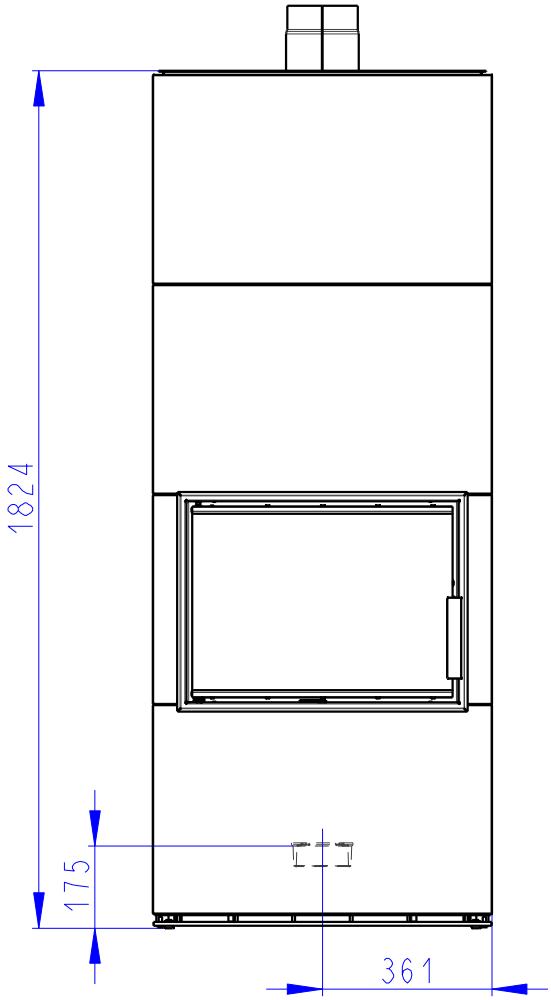

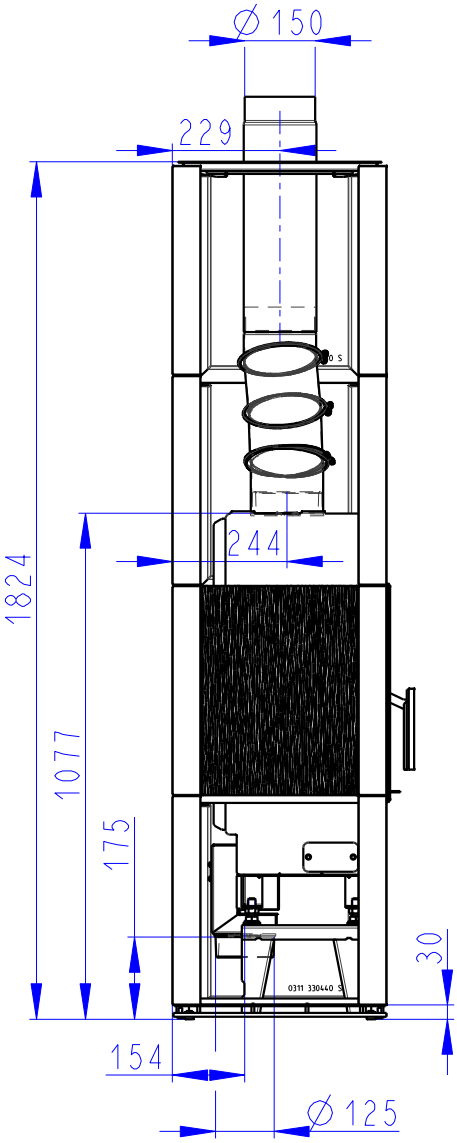

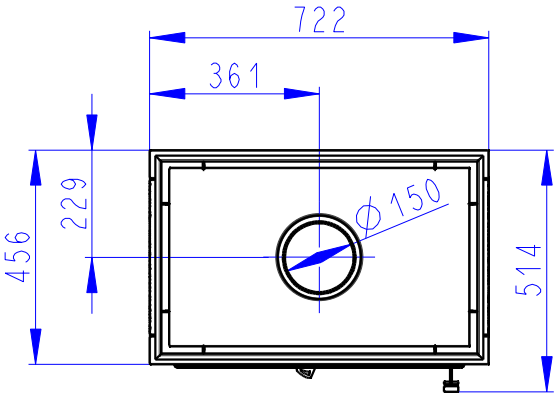

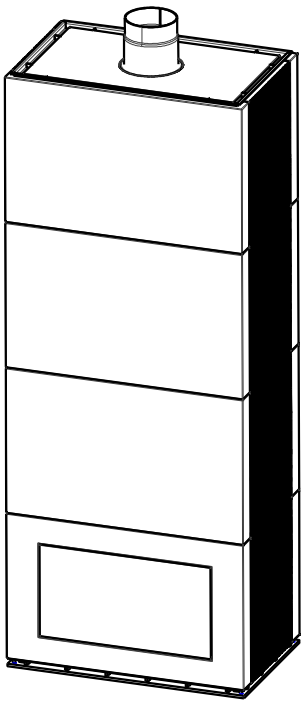

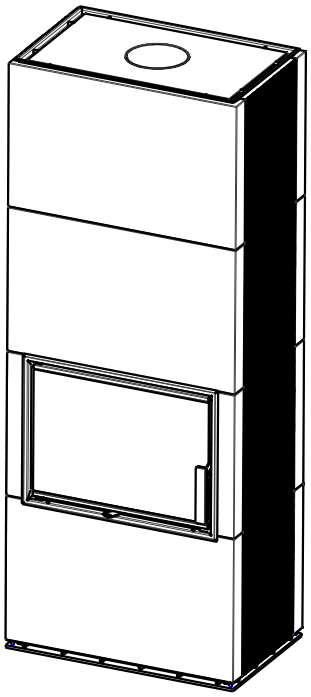

Romotop® SOLID FN Z
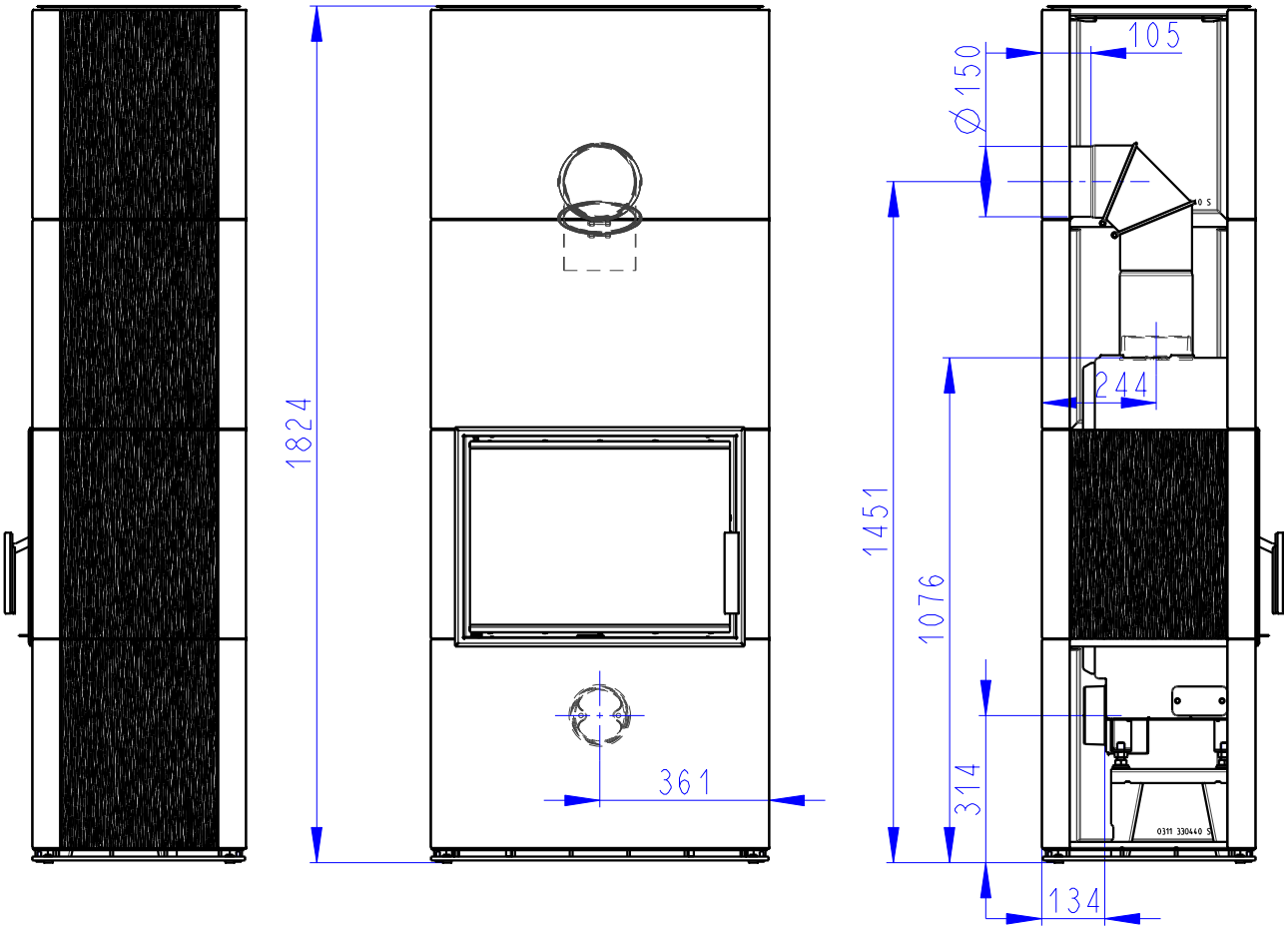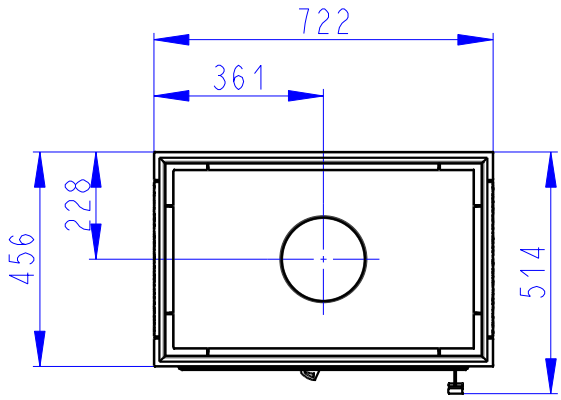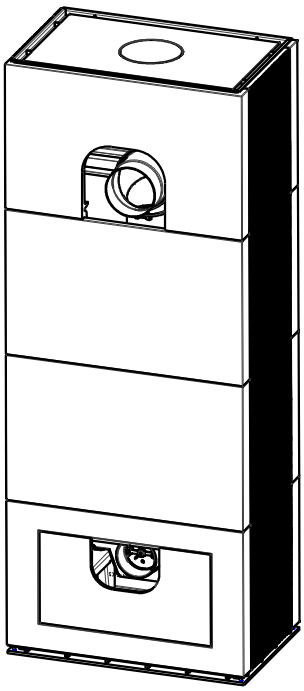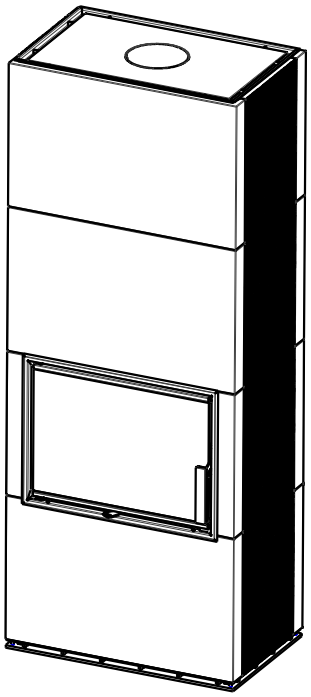
KERAMIKA
KERAMIK
CERAMIC